Adagio Water Features

SPECIFICATION SHEET
Hand-made in the USA

SOLITUDE RIVER

Wall-Mounted Water Feature · Indoor / Outdoor

Three panels placed side by side with no gap, the Solitude River reads as one wide, continuous sheet of water. Each panel has its own pump and lights, and the feature hangs on **EZ-install brackets**.



Round corners shown with Silver Mirror

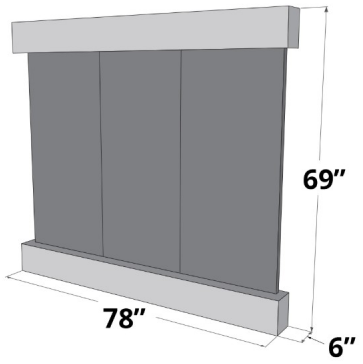

Overall dimensions (SRS / SRR)

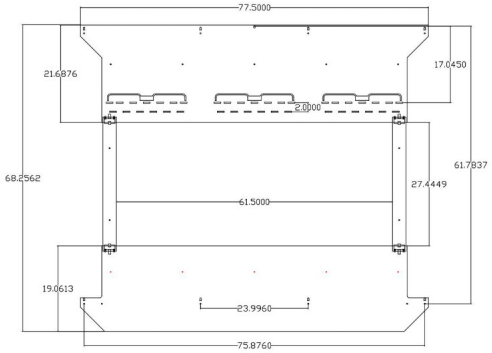

Wall bracket layout (dimensions shown)

SPECIFICATIONS

Dimensions	**78" W × 69" H × 6" D**
Corners	Square or round
Surfaces	3, side by side (no gap)
Water capacity	Approx. 12 gallons
Pump	325 GPH (G325A), qty 3

Lighting	9 LED GU10 down lights, soft white (2700–3000K)
Control	3-way pull chain; remote available
Power	One cord, 90° plug; outlet behind the feature
Shipping	Included, continental U.S. & Canada; fuel surcharges may apply
Warranty	1-year limited

Approx. weight by water surface	Hanging (dry)	Filled with water	Shipping
Mirror	320 lbs	420 lbs	525 lbs
Featherstone	230 lbs	330 lbs	450 lbs
Natural stone (slate, marble, travertine, granite)	690–720 lbs	790–820 lbs	925–1,025 lbs

Filled weight adds about 100 lbs of water (12 gal). Size wall anchors for the filled weight. All weights are approximate.

Adagio Water Features

SOLITUDE RIVER

Features, Finishes & Options

STANDARD FEATURES

- EZ-install wall bracket makes hanging simple
- 3-way pull chain: lights, water, both or off
- Single cord with a 90° plug hides behind the feature
- Double-tested, welded plastic liner prevents leaks
- Non-clogging water distribution for an even sheet of water
- Durable powder-coat finish; modular, replaceable components

INCLUDED

- Wall bracket and hardware for a standard wood-stud wall
- Three 325 GPH electric pumps
- 9 LED GU10 bulbs (soft white)
- Polished multi-color river pebbles
- 3-D step-by-step digital instructions (BILT app)
- 1-year limited warranty

FINISH OPTIONS

Water surface

Mirror: Silver, Bronze

Featherstone (slate): Multi-color, Green, Black, Rainforest Brown, Rainforest Green

Natural slate: Multi-color, Green

Marble: Brown Rainforest, Green Rainforest, Black Spider, Viscon White

Travertine: Chavo, Piano, Grindio, Fantasia, Magnifico

Granite: Blue Patagonia, Red Patagonia, Norwegian Rose, Fantasy Brown

Natural stone varies. See the surface examples · stone selection

Metal trim

Antique Bronze · Blackened Copper · Bronze Silverado · Copper Vein · Eurso Vein · Harvest Gold · Java · Rustic Copper · Shimmer Gold · Silver Metallic · Silver Vein · Snow White · Stainless Steel · Textured Black · Woodland Brown

View metal trim options

Pebbles

Multi-color (standard)

Black, White or Striped (upgrade)

View pebble options

OPTIONAL UPGRADES

Color-changing LED bulbs (9) with remote

Indoor Hood Cover: decorative cap for the top

Custom height: 51" to 68" (69" standard)

Gravity drain

Individual stone selection

Countertop water distiller

On/off remote control

Outdoor Hood Cover: shields the top from weather

Computerized Auto-Fill with gravity drain

Etched logo: one or more colors

Upgraded pebbles (Black, White, Striped)

WATER & CARE

- Distilled water recommended; filtered water also works well
- Never use salt-softened water
- Top off regularly, or add the Auto-Fill
- Wire the outlet to a wall switch for easy on/off

OUTDOOR USE

- Rated for indoor and outdoor use; mount on a covered wall, such as a porch or under an awning
- Add the Outdoor Hood Cover to shield the top from rain and debris
- Before freezing weather, drain and dry; never add antifreeze
- GFCI-protect the circuit at the breaker or an upstream outlet, not with an outlet behind the feature (hard to reset)